Data Sheet | Item Number: 2273-243

Conector de îmbinare PUSH WIRE®; pentru conductori unifilari; Pastă de contact Alu-Plus; max. 2,5 mm²; 3 conductori; carcasă transparentă; capac portocaliu; Temperatură aer ambiant: max 60°C (T60); 2,50 mm²; transparent

https://www.wago.com/2273-243

Color: ☐ transparent

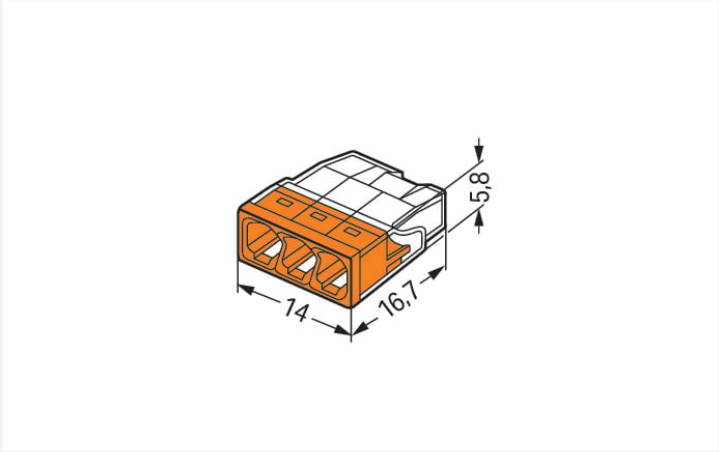

Dimensions in mm

Push wire® splicing connector, 2273 Series, Push-in

Push wire® splicing connector (item number 2273-243) simplifies electrical installations. This series of PUSH WIRE® connectors ensures safe and quick connections in both surface-mounted and flush-mounted junction boxes in any building, regardless of installation complexity. Rated current and voltage are key factors to consider when selecting a splicing connector, as they indicate how the product can be used. This product has a rated voltage of 450 V and a rated current of 24 A, making it suitable for high-load applications. Ensure that the strip lengths are 11 mm when connecting conductors to push wire® splicing connector. This product features conductor terminals and utilizes PUSH WIRE®. Our PUSH WIRE® connection uses the stiffness of the conductor to overcome the clamping spring's contact force, allowing faster and easier conductor clamping. Dimensions: 18 x 5.8 x 16.7 mm (width x height x depth). Push wire® splicing connector is suitable for conductor cross sections ranging from 0.5 mm² to 2.5 mm². The contact surface is coated with tin.

Notes

Safety management note	**NOTICE: Observe installation and safety instructions!** • **Only to be used by electricians!** • Do not work under voltage/load! • Use only for proper use! • Observe national regulations/standards/guidelines! • Observe technical specifications for the products! • Observe the number of permissible potentials! • Do not use damaged/dirty components! • Observe conductor types, cross-sections and strip lengths! • Insert conductor until it hits the product's backstop! • Use original accessories! **To be sold only with installation instructions!**
Safety Information	in grounded power lines

Electrical data

Ratings per	IEC/EN 60998		
Overvoltage category	III	III	II
Pollution degree	3	2	2
Nominal voltage	-	-	450 V
Rated surge voltage	-	-	4 kV
Rated current	-	-	24 A

Connection data

Clamping units	3
Total number of potentials	1

Connection 1

Connection technology	PUSH WIRE®
Actuation type	Push-in
Connectable conductor materials	Copper Aluminum
Connectable conductor materials (note)	**Terminating Aluminum Conductors** WAGO Spring-Clamp Terminal Blocks are suitable for solid aluminum conductors up to 4 mm²/12 AWG if WAGO "Alu-Plus" Contact Paste 249-130 is used for termination. "Alu-Plus" Contact Paste Advantages: • Automatically destroys the oxide film during clamping. • Prevents fresh oxidation at the clamping point. • Prevents electrolytic corrosion between aluminum and copper conductors (in the same terminal block). • Provides long-term protection against corrosion. For spring pressure connections with PUSH WIRE® connection technology, **WAGO recommends that the aluminum conductor first be cleaned** and then immediately inserted into the clamping unit filled with "Alu-Plus" contact paste. It is also possible to apply WAGO "Alu-Plus" **additionally** on the whole surface of the aluminum conductor before termination. Please note that the nominal currents must be adapted to the reduced conductivity of the aluminum conductors:: 2.5 mm² = 16 A 4 mm² = 22 A
Solid conductor	0,5 … 2,5 mm² / 20 … 16 AWG
Strip length	11 mm / 0.43 inci
Wiring direction	Side-entry wiring

Physical data

Width	18 mm / 0.709 inci
Height	5,8 mm / 0.228 inci
Depth	16,7 mm / 0.657 inci

 Continued on next page

Material data

Note (material data)	Information on material specifications can be found here
Color	transparent
Cover color	orange
Material group	IIIa
Insulation material (main housing)	Polycarbonate (PC)
Flammability class per UL94	V2
Clamping spring material	Chrome-nickel spring steel (CrNi)
Contact material	Electrolytic copper (E_{Cu})
Contact Plating	Tin
Fire load	0.019 MJ
Weight	1.1 g

Environmental requirements

Ambient temperature (operation)	+60 °C
Continuous operating temperature	105 °C
Temperature marking per EN 60998	T60

Commercial data

Product Group	7 (Push Wire Conn.)
ETIM 9.0	EC000446
ETIM 8.0	EC000446
PU (SPU)	1000 (100) Buc.
Packaging type	Box
Country of origin	DE
GTIN	4050821031994
Customs tariff number	85369010000

Environmental Product Compliance

RoHS Compliance Status	Compliant,No Exemption

Approvals / Certificates

General approvals

Approval	Standard	Certificate Name
VDE VDE Prüf- und Zertifizierungsinstitut	EN 60998	40029794

Declarations of conformity and manufacturer's declarations

Approval	Standard	Certificate Name
EU-Declaration of Conformity WAGO GmbH & Co. KG	-	-
UK-Declaration of Conformity WAGO GmbH & Co. KG	-	-

 Continued on next page

Approvals for marine applications

Approval	Standard	Certificate Name
ABS American Bureau of Shipping	-	15-HG1419918-PDA
DNV GL Det Norske Veritas, Germanischer Lloyd	EN 60998	TAE000015T
LR Lloyds Register	EN 60998	LR22207029TA

Downloads

Environmental Product Compliance

Compliance Search

Environmental Product Compliance 2273-243

CAD/CAE-Data

CAD data

2D/3D Models 2273-243

1 Compatible Products

1.1 Optional Accessories

1.1.1 Mounting adapter

1.1.1.1 Mounting accessories

Item No.: 2273-500
Suport de montaj; pentru con. cu una şi două linii; Seria 2273; pt mont. pe şină DIN 35/montare cu şurub; portocaliu

Installation Notes

 Continued on next page

Conductor termination

Strip solid conductor to 11 mm/0.43 inch (see marking).

The transparent housing shows if conductors are fully inserted; within the colored base, a clear port shows if the conductor's strip length is correct. Conductors are correctly stripped if the clear port shows no bare conductor on the unprinted connector side. Picture shows center conductor with exceeded strip length.

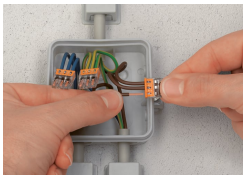

Termination: Insert the stripped solid conductor until it hits the backstop.

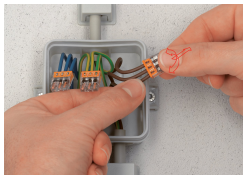

Removal: Hold conductor to be removed and twist alternately left and right while pulling the connector.

Testing

Testing via test port opposite to conductor entry.