Data Sheet | Item Number: 221-2514

Mounting carrier with strain relief; 4-way; for inline splicing connector with lever; with snap-in mounting foot; gray

https://www.wago.com/221-2514

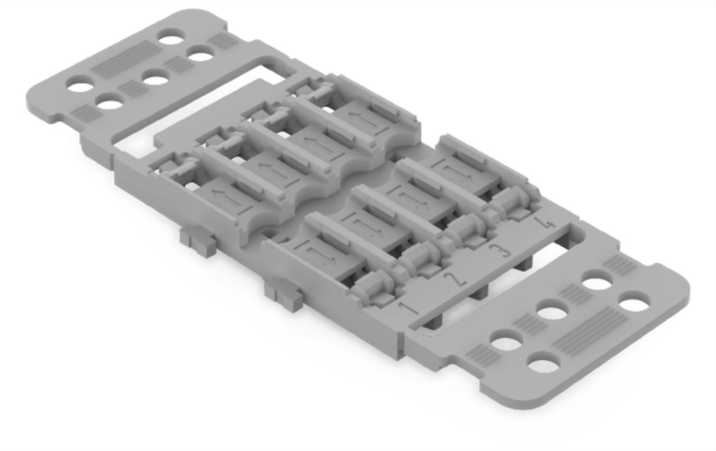

Color: gray

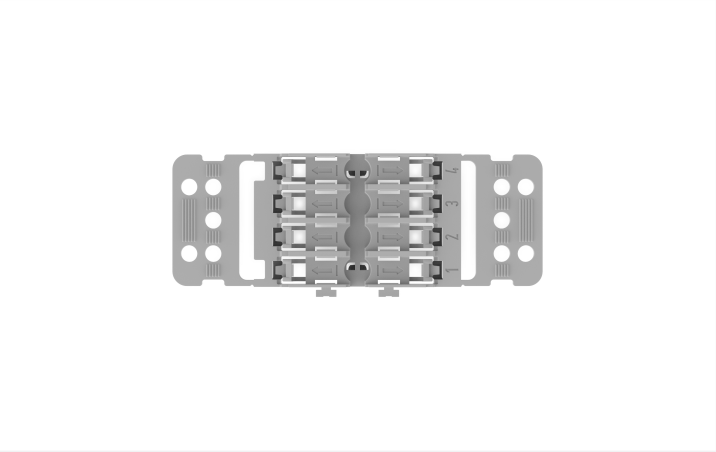

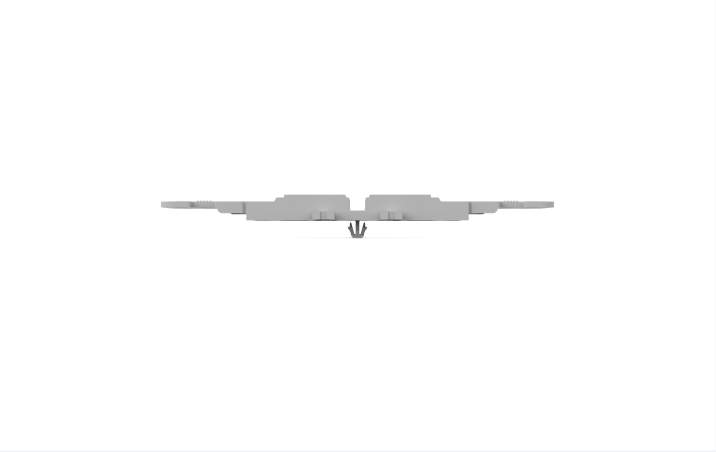

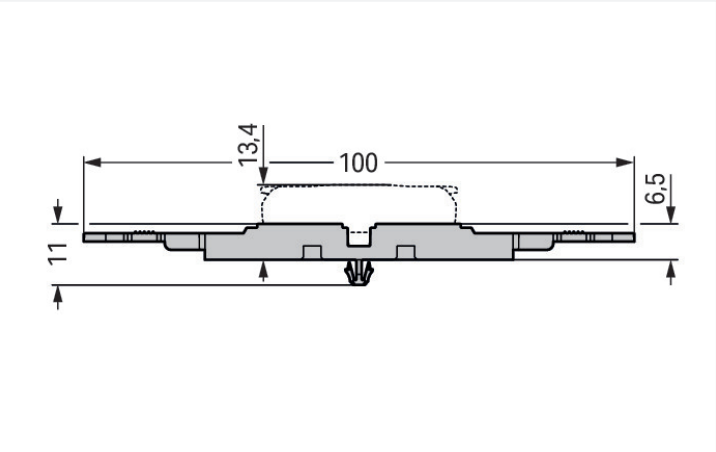

Physical data

Width	38.8 mm / 1.528 inches
Height	11.03 mm / 0.434 inches
Height from the surface	6.5 mm / 0.256 inches
Depth	100 mm / 3.937 inches
Drilled hole diameter for snap-in mounting foot with tolerance	3.5 mm

Mechanical data

Design	4x
Mounting type	Snap-in foot

Material data

Note (material data)	Information on material specifications can be found here
Color	gray
Material group	I
Insulation material (main housing)	Polyamide (PA66)
Flammability class per UL94	V0
Fire load	0.221 MJ
Weight	8.2 g

Commercial data

PU (SPU)	25 (5) pcs
Packaging type	Box
Country of origin	CN
GTIN	4066966119909
Customs tariff number	39269097900

Product Classification

UNSPSC	39121702
ETIM 9.0	EC002848
ETIM 10.0	EC002848
ECCN	NO US CLASSIFICATION

Environmental Product Compliance

RoHS Compliance Status	Compliant,No Exemption

Downloads

Environmental Product Compliance

Compliance Search

Environmental Product Compliance 221-2514

Continued on next page

CAD/CAE-Data

CAD data	CAE data
2D/3D Models 221-2514	EPLAN Data Portal 221-2514
	ZUKEN Portal 221-2514

1 Compatible Products

1.1 Optional Accessories

1.1.1 Installation

1.1.1.1 Mounting accessories

Item No.: 209-119
Fixing screw; for 209-120 mounting carrier

Item No.: 209-123
Mounting foot with screw; can be screwed on terminal blocks with fixing flange; 6.4 mm wide; gray

Item No.: 209-120
Mounting foot; can be snapped on terminal blocks with snap-in mounting foot; for mounting on relay-modules; 6.4 mm wide; gray

1.1.2 Marking

1.1.2.1 Marking strip

Item No.: 210-834
Marking strips; on reel; 5 mm wide; plain; Self-adhesive; white

Installation Notes

Installation

Place the inline splicing connector on the carrier in front of the mounting position.

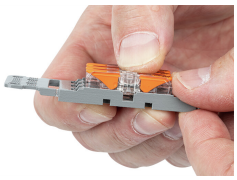

Push the connector to the center position until it snaps into place.

Mounting carrier without strain relief – snapped onto DIN-rail

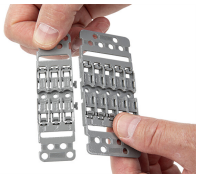

Various combinations of 1- to 5-connector mounting carriers are possible via side-by-side latching mechanism.

 Continued on next page