Data Sheet | Item Number: 224-201

Service connector; push-button on both sides; Lighting side: for all conductor types; Inst. side: for solid conductors; 224 Series; max. 2.5 mm²; Surrounding air temperature: max 60°C; 2,50 mm²; gray

https://www.wago.com/224-201

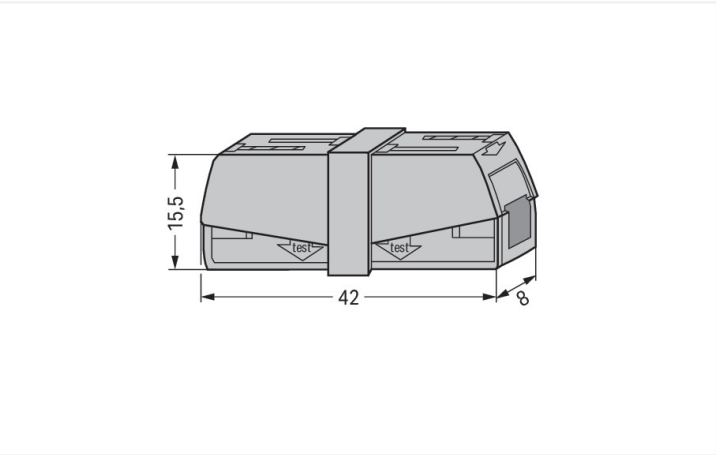

Color: gray

Dimensions in mm

Lighting connector, 224 Series, gray

This lighting connector (item number 224-201) streamlines wire connections, making them both quick and easy. WAGO's 224 Series lighting connectors make connecting lights a breeze—and completely safe. Light up any space quickly and reliably. If you need to connect a fine-stranded conductor with a solid conductor, choose the 224 Series for performance you can trust. Strip lengths must be between 9 and 11 mm when connecting conductors to this lighting connector. Our splicing connector is rated for 400 V and is designed for use with a rated current of up to 24 A. As such, it is suitable for high-load applications. This product features conductor terminals and utilizes CAGE CLAMP®. Our trusted universal connection known as CAGE CLAMP® is the industry standard when it comes to connection technology and electrical interconnections. The item's dimensions are (8 x 15.5 x 42) mm (width x height x depth). This lighting connector is suitable for conductor cross sections ranging from 0.5 mm² to 2.5 mm².

Notes

Safety Information	in grounded power lines

Electrical data

Ratings per	EN 60664		
Overvoltage category	III	III	II
Pollution degree	3	2	2
Nominal voltage	-	-	400 V
Rated impulse withstand voltage	-	-	4 kV
Rated current	-	-	24 A

General information	
Wiring direction	Side-entry wiring

Connection Data

Clamping units	2
Total number of potentials	1

Connection 1	
Connection technology	CAGE CLAMP®
Actuation type	Push-in
Connectable conductor materials	Copper Aluminum

Continued on next page

Connection 1

Connectable conductor materials (note)	**Terminating Aluminum Conductors (not for use in North America)** WAGO Spring-Clamp Terminal Blocks are also suitable for solid aluminum conductors up to 4 mm²/12 AWG if WAGO Aluminum Contact Paste 249-130 is used for termination. Aluminum Contact Paste Advantages: ▪ Automatically destroys the oxide film during clamping. ▪ Prevents fresh oxidation at the clamping point. ▪ Prevents electrolytic corrosion between aluminum and copper conductors (in the same terminal block). ▪ Provides long-term protection against corrosion. Using terminal blocks with CAGE CLAMP® Spring Pressure Connection Technology, **aluminum conductors must first be cleaned with a blade** and then immediately inserted into the clamping units filled with aluminum contact paste. It is also possible to apply WAGO Aluminum Contact Paste **additionally** on the whole surface of the aluminum conductor before termination. Please note that the nominal currents must be adapted to the reduced conductivity of the aluminum conductors:: 2.5 mm² = 16 A 4 mm² = 22 A
Solid conductor	0.5 … 2.5 mm² / 20 … 16 AWG
Fine-stranded conductor	0.5 … 2.5 mm² / 20 … 16 AWG
Strip length	9 … 11 mm / 0.35 … 0.43 inches
Wiring direction	Side-entry wiring

Physical data

Width	8 mm / 0.315 inches
Height	15.5 mm / 0.61 inches
Depth	42 mm / 1.654 inches

Material data

Note (material data)	Information on material specifications can be found here
Color	gray
Fire load	0.085 MJ
Weight	4.6 g

Environmental requirements

Ambient temperature (operation)	+60 °C

 Continued on next page

Commercial data

PU (SPU)	50 pcs
Packaging type	Box
Country of origin	CH
GTIN	4044918818407
Customs tariff number	85369010000

Product Classification

UNSPSC	39121409
eCl@ss 10.0	27-14-11-03
eCl@ss 9.0	27-14-11-03
ETIM 9.0	EC000446
ETIM 10.0	EC000446
ECCN	NO US CLASSIFICATION

Environmental Product Compliance

RoHS Compliance Status	Compliant,No Exemption

Approvals / Certificates

General approvals

Approval	Standard	Certificate Name
CSA DEKRA Certification B.V.	C22.2	1053495
UL UL International Germany GmbH	EN 60998	CCA-2617-A1
UL UL International Germany GmbH	EN 60998	D-05895-A1 (EN60998-1 EN60998-2-2)
UL UL International Germany GmbH	UL 486C	E69654
VDE VDE Prüf- und Zertifizierungsinstitut	EN 60998	40022792

Approvals for marine applications

Approval	Standard	Certificate Name
ABS American Bureau of Shipping	-	23-2417173-PDA
LR Lloyds Register	EN 60998	LR22207029TA
PRS Polski Rejestr Statków	EN 60998	TE/1093/880590/23

Declarations of conformity and manufacturer's declarations

Approval	Standard	Certificate Name
EU-Declaration of Conformity WAGO GmbH & Co. KG	-	-
UK-Declaration of Conformity WAGO GmbH & Co. KG	-	-

 Continued on next page

Downloads

Environmental Product Compliance

Compliance Search

Environmental Product Compliance 224-201

Documentation

Bid Text

224-201	19.02.2019	xml 3.12 KB
224-201	21.02.2019	docx 15.18 KB

CAD/CAE-Data

CAD data

2D/3D Models 224-201

CAE data

EPLAN Data Portal 224-201

WSCAD Universe 224-201

ZUKEN Portal 224-201

1 Compatible Products

1.1 Optional Accessories

1.1.1 Tool

1.1.1.1 Aluminum contact paste

Item No.: 249-130
Syringe; Contents: 20 ml Alu contact paste

Installation Notes

Conductor termination

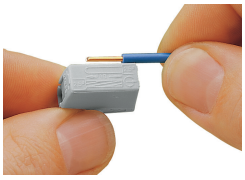

Strip conductor to 9 ... 11 mm (0.35 ... 0.43 inch).

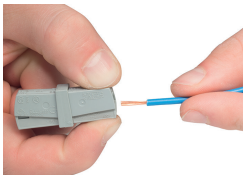

To connect: Press button fully, insert stripped conductor into square entry and release.

Continued on next page

Application

Service connector